Manure Management for Livestock Owners

Northeast Recycling Council, Inc.

Disclaimer

- This material is based upon work supported under a grant by the Rural Utilities Service, United States Department of Agricultural. Any opinions, findings, and conclusions or recommendations expressed in this material are solely the responsibility of the authors and do not necessarily represent the official view of the Rural Utilities Service.

Animal Waste Management Dilemma

- Water pollution concerns (“nonpoint source”).
- Decreasing land base.
  - Encroaching suburbia.
- Increased environmental awareness.
- Increasing animal density.
- Inappropriate manure management.

Polluted Lake

Small Livestock Operations are Increasing

Manure Happens

- Valuable resource—if well managed.
- If Improperly managed—
  - Source of water pollution.
  - Can contaminate drinking water.
  - Odor issues.
  - Flies, parasites, & other nuisances.
  - Can harm livestock & wildlife.

Manure Really Happens!

4 horses in stalls = 160,000 pounds of manure & wet bedding per year.

Goals of Manure Management

- Utilize manure nutrients for enhancing soil.
- Protect health and safety of the public and livestock.
- Prevent surface and ground water contamination.

Best Management Practices (BMPs)

- Practical.
- Cost effective.
- Easy to implement.

Manure Management Plan Basics

- Farm/Operation Specifics
  - Number & type of animals (A.U.).
  - Period of confinement.
  - Estimated manure production.
- Special Environmental Factors
  - List sensitive areas, including wells, wetlands, streams, sand/gravel aquifer, soil type, etc.

Manure Management Plan, Cont.

- Farm Sketch.
  - Buildings, wells, surface water, pastures, etc.
  - Drainage paths.
- Manure storage type.
  - Volume and length of planned storage.
- Manure utilization description.

Manure Management Plan, Cont.

- Other records (as applicable):
  - Grazing rotation.
  - Land application records & nutrient management plan.
    - Soil & manure test results; crop nutrient needs.
    - Calculations of how much manure to apply.
    - Dates of manure application(s) & incorporation.
    - Rate (amount of manure) applied.
    - Weather & field conditions during application.
  - Compost monitoring & application records

Best Management Practices

Bedding Considerations

- Use less bedding.
  - Enough to soak up urine and ensure the health of livestock while minimizing waste.
- Clean stalls carefully, removing only manure and soiled bedding.
- Consider rubber mats.
- Alternative bedding products.
  - Newspaper bedding & wood pellets.

Smart Grazing

- Subdivide pasture into two more areas.
- Rotate livestock so that grass is left standing at about 2 inches.
  - Allow grass to grow to about 8 inches before grazing animals on it again.

Rotational Grazing

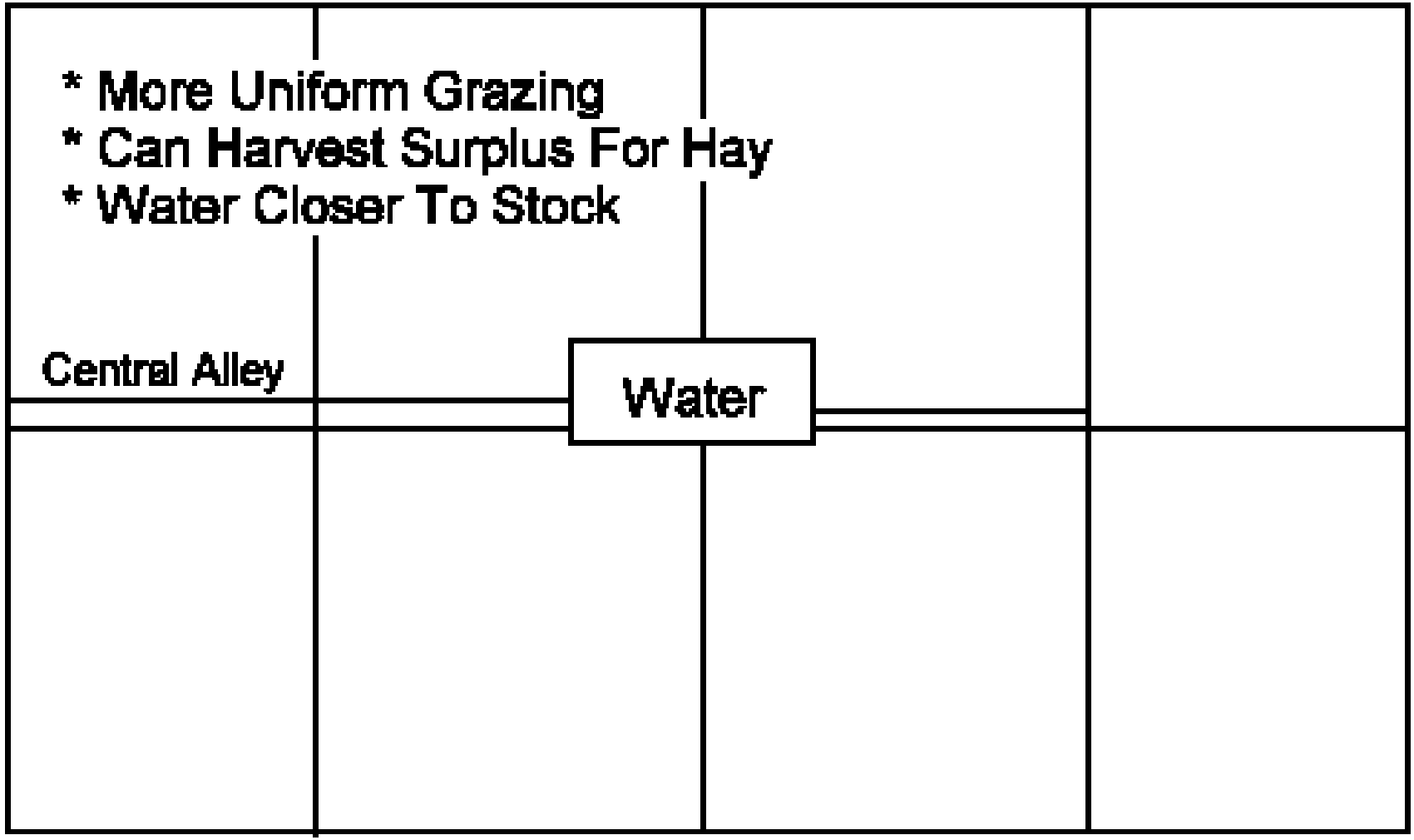

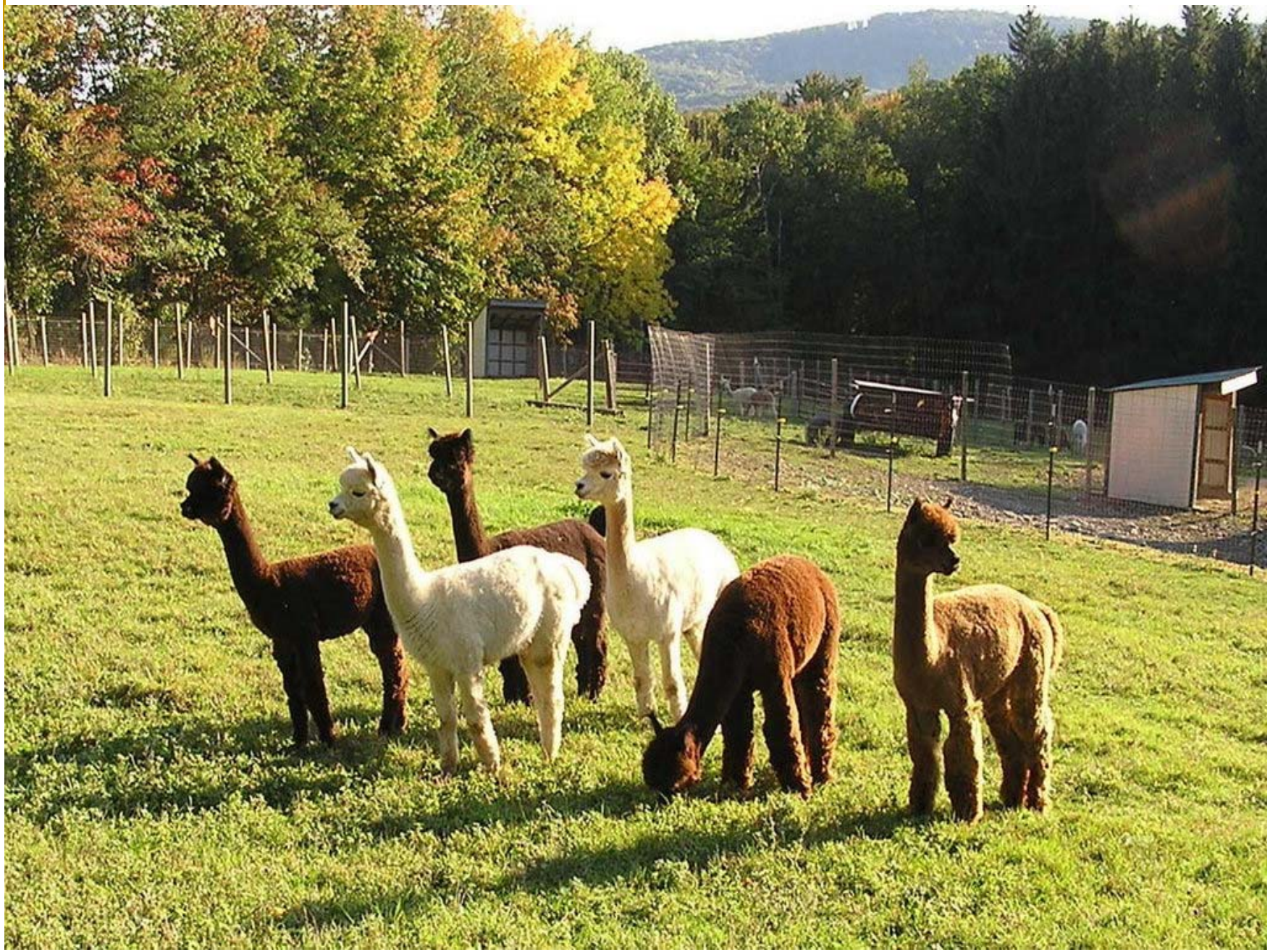

More Smart Grazing

- Multiple watering & feeding stations.
  - Moving stations will reduce erosion & manure buildup.
- Do not allow manure to build up in pastures.
  - Spread manure thinly & uniformly.
- Remove manure daily to every 3 days from heavily deposited locations.
  - Reduces parasite problems.
  - Reduces fly problems.

Drag Manure to Spread & Dry

Paddock Layout

- Design with flexibility in mind.
- Design the rotational system on paper first.
- 10 paddocks is optimum.
  - Use larger “permanent” paddocks & subdivide using portable fencing.
- Use inexpensive and electric fencing.
  - Perimeter fencing vs. internal divisions.
  - Depends on livestock types.

Paddock Layout, continued

- Consider slopes & hills.
  - South facing.
  - Graze livestock on contour.
- Each paddock should contain enough land to provide about the same amount of forage.
- Establish lanes or walkways on higher, drier soils.

More Smart Grazing

- Sacrifice paddock.
  - Allows better control of where & when livestock graze.
- Fence off or limit access to waterways.
- Try not to graze livestock on pastures during rainy periods.
- Grass buffers, filter strips, & riparian areas.


DANGER
ELECTRIC
FENCE

Problem Pastures

- Don’t let your pastures look like this!

Manure Storage: Size & Location

- Hold all the manure and bedding generated until it can be utilized.
- Long-term winter storage of 180 or more days will be necessary.
  - October to April.
- Near the manure source; equipment access and maneuverability.

Manure Storage: Size & Location, cont.

- Setbacks.
  - 100 feet from wells, wetlands, and surface water bodies (streams, ponds).
  - 200 feet away from residences.
  - 50 feet from property lines.
- Downwind from stables/barns and neighbors' residences.
- Use shrubbery or fencing to screen.

Manure Storage: Structures

- Pile contained on a pad or in a small shed.
- Wooden or masonry “bucking wall” behind the pile.
  - Three bucking contains manure and leachate more effectively and makes handling easier.
- Structures for storing larger quantities of manure (e.g., more than a five horses, or AU equivalents).
  - Wooden or concrete storage sheds are options.
- Grassy or vegetated filter/buffer around storage.

Manure Storage: Pad & Covering

- Compacted earth or stone dust.
- Packed gravel, road base material, or crushed limestone base.
  - Farms with horses or larger numbers of animals.
- A rough-surfaced ramp.
- Cover to prevent run-off from the pile which can lead to water contamination.
  - Tarp
  - Permanent roof

Manure Storage


Greenleaf

Field Stacking

Other Storage Options

- Plastic garbage cans with lids, wood or metal bins, or carts.
- Manure spreader
  - Supplemental storage will be necessary.
- Dumpsters
  - Contract with a hauler.

Hauling Manure

3 Steps to Land Application

- <u>Step 1: Start by getting to know your soil.</u>
  - Soil test for the field or crop area where the manure is to be spread.
- <u>Step 2: Know your manure.</u>
  - See the ToolKit.
  - Get a nutrient analysis for nitrogen, phosphorus and potassium (“N-P-K”).
    - Must be uniform sample.

3 Steps to Land Application, cont.

- <u>Step 3: Consider crop needs</u>
  - Use fertilizer or production guide to determine the nutrient needs .
  - Do not apply manure (and other fertilizers) at rates that exceed the amount necessary to meet crop nutrient needs in a growing season.

NewerSpreader

Plowing Manure or Compost

Composting—Is it for you?

- Labor & time.
- Pitchfork & wheelbarrow.
- Front loader.
- Manure spreader.
- Thermometer.

Elements of Composting

- *Aeration*
  - Successful composting requires air or oxygen.
- *Nutrient balance and porosity*
  - 20 to 40 parts of carbon to one part of nitrogen.
- *Moisture*
  - 40 to 65 percent—like a damp sponge.
- *Temperature120° and 160°F.*
  - *131°F for 15 days to kill weed seeds & parasites.*

Its Like Baking a Cake…

- One part manure.
- Two parts bedding or carbon source.
- Moisture.
- Aeration.
- Containment & cover.

Advantages

- Typically can be done with existing farm equipment and available farm land.
- Improves manure handling.
  - Reduces volume.
  - Reduces moisture content.
  - Reduces odor.
  - Reduces fly & parasite problems.
  - More uniform & easier to handle or spread.

Advantages, continued

- Improved land application.
  - Nitrogen is more stable & released more slowly.
  - Weed seeds & pathogens destroyed.
- Soil conditioner.
- Can be used as a bedding for poultry litter & other livestock.
- Saleable product.
- Cost share money may be available from NRCS.

Compost Pile

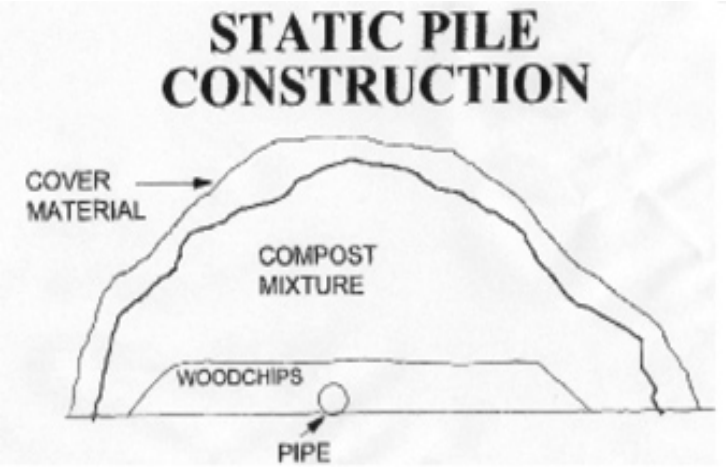

Figure 1. Diagram of a static pile construction with a perforated pipe insert.

Compost Bins

- Wood, pallets, or concrete blocks.
  - Nine pallets with make a 3-bin set.
  - Landscape timbers can also be used.
- 3-5 feet high.
  - Enough capacity to hold about 4 cubic yards of material (16 wheelbarrows worth of material).
  - Widths can range from 5-8 feet.

Bins, continued

- Pile manure and bedding wastes into the first bin until it is full.
  - When the first bin is full, begin filling the second bin.
  - Use the third bin to turn the compost from the first bin into for aeration.
  - Water materials as added.
  - Add additional bins if necessary.

Compost Bins

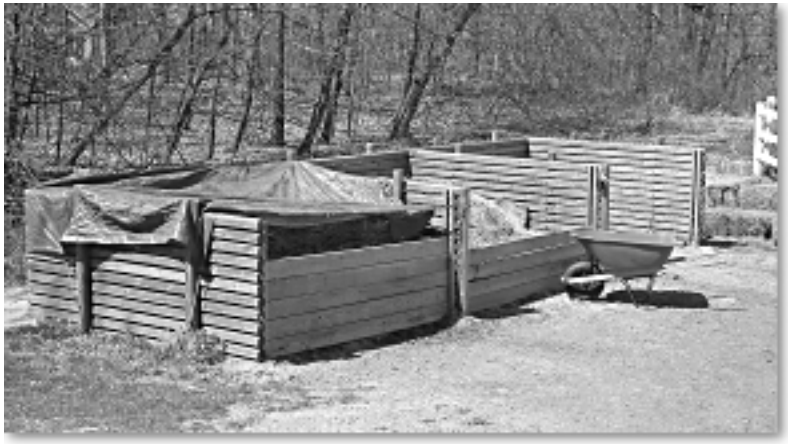

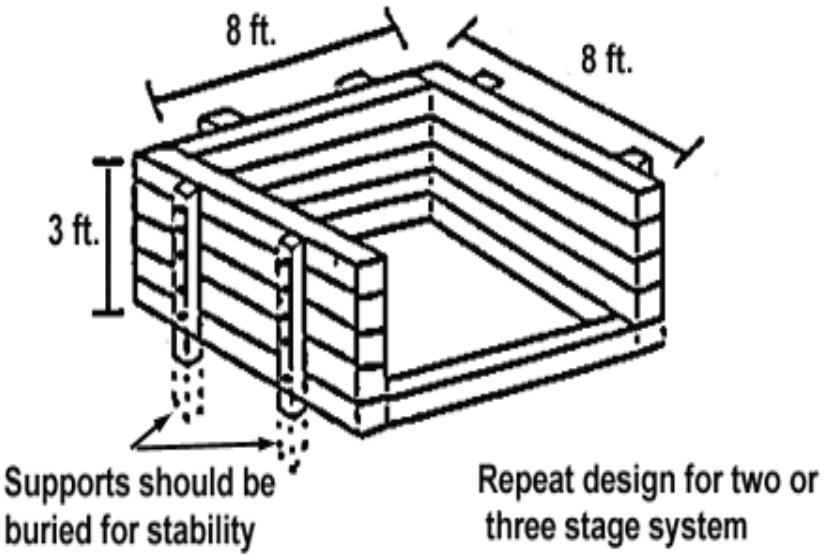

Shed System

Inexpensive Shed System

Aeration System

Aeration System

More Specifics

- 6-8 inch layer of wood chips under your bins, pile, or windrow to help airflow.
- To begin the compost process, materials will need to be stacked at least 3-5 feet high.
- Take compost temperature every 5-10 days.
  - Turn when it goes below 120°F.
- Several months to 1 year or more to complete the process.

Off-Farm Manure Utilization

- Buy or rent more land.
- Off-site land application of manure.
- Off-site compost operation.
- “Free garden fertilizer.”
- Blended soil producers, organic farmers, home gardeners, mushroom growers, others.

Contact Information

Athena Lee Bradley, Project Manager
Northeast Recycling Council, Inc.
139 Main Street, Suite 401
Brattleboro, Vermont 05301
athena@nerc.org
Tel: 802-254-3636, Fax: 802-254-5870
www.nerc.org